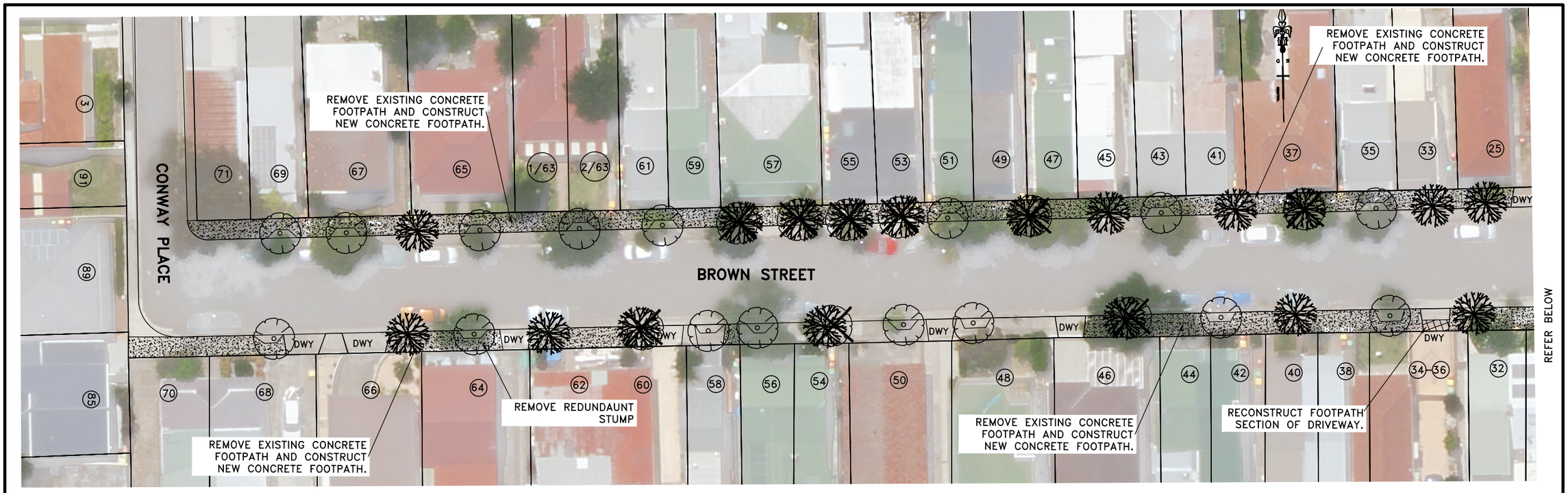

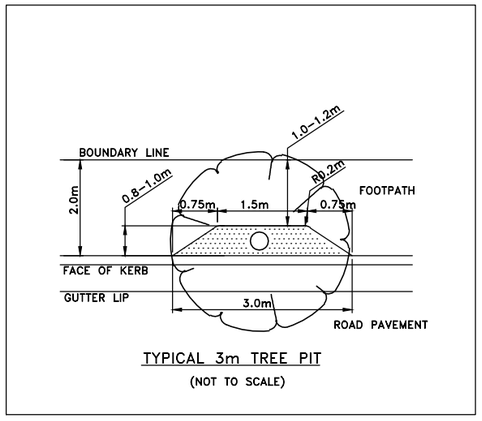

TYPICAL 3m TREE PIT

(NOT TO SCALE)

NOTE: ALL EXISTING STREET SIGNS/STEMS THAT ARE FADED OR DAMAGED ARE TO BE REPLACED AS PART OF THE WORKS

NOTE: CONSTRUCT TREE PITS WITH DIFFERENT SIZES AS SHOWN ON THE TYPICAL PLANS. SOME TREE PITS CANNOT BE CONSTRUCTED ACCORDING TO THE TYPICAL PLANS. IN THOSE INSTANCES, TREE PITS CONFIGURATION SHOULD BE DECIDED AT SITE WITH COUNCILS REPRESENTATIVE.

CONSTRUCT EXPANDED TRAPEZIUM (CHAMFERED) STREET TREE PIT (WITH EXISTING OR NEW STREET TREES) WITH LEAF MULCH OR EQUIVALENT. REFER TO TYPICAL TREE PIT PLANS FOR PIT SHAPE.

DENOTES EXISTING STREET TREE

DENOTES PROPOSED NEW STREET TREE

DENOTES EXISTING STREET TREE TO BE REMOVED

DENOTES NEW CONCRETE FOOTPATH

DENOTES NEW CONCRETE DRIVEWAY

DWY — DENOTES EXISTING DRIVEWAY (TO REMAIN UNLESS OTHERWISE NOTED)

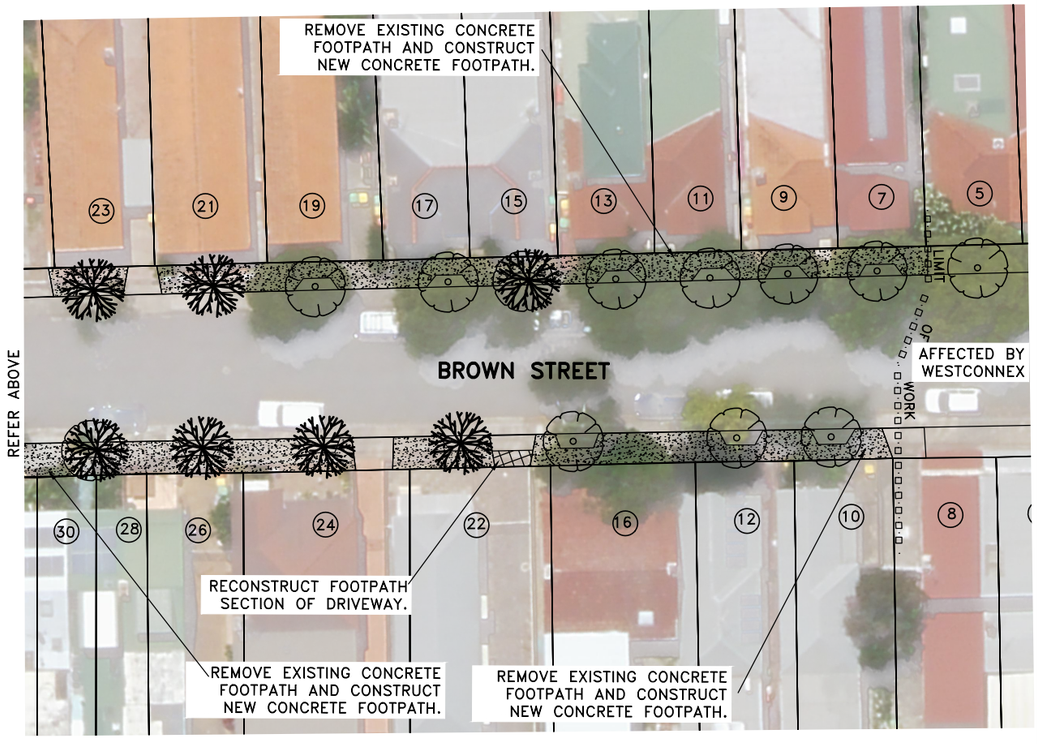

CHECKED & APPROVED	SURVEYED & DRAFTED – –	TRAFFIC COMMITTEE APPROVED	TECHNICAL DIRECTION/AUST STANDARD REF	S.R.A. / SURV. GEN.		
				R.T.A.		
				A.G.L. / SHELL PIPELINES		
APPROVED FOR CONSTRUCTION	DESIGNED SS APR 2017	QUANTITIES	SERVICES AFFECTED	SYDNEY WATER		
			TELSTRA / OPTUS	TELSTRA / OPTUS		
	DRAWN SS APR 2017		STORM WATER	SYDNEY ELECTRICITY		
			WATER	NOTICE OF ENTRY		
			SEWER	KERB & GUTTER		
			GAS	NOTICES	DATE	
			ELEC. CABLES			

SERVICES

TELECOM/OPTUS	—T—T—T—T—
GAS	—G—G—G—G—
SEWER	—S—S—S—S—
WATER	—W—W—W—W—
RAILWAY	—R—R—R—R—
ELEC. CABLES	—E—E—E—E—
OIL PIPELINES	—P—P—P—P—
STORM WATER	—SW—SW—SW—

DATUM A. H. D.

SCALES (ORIGINAL A1) N/A

AMEND	DATE	DESCRIPTION	APPROV.
A	DEC16	VERGE GARDENS DETAILS,TREE REMOVAL AND TREE PITS RECONSTRUCTION ADDED.	J.D

INNER WEST COUNCIL

BROWN STREET, ST PETERS

CONWAY PLACE TO CAMPBELL ST (BOTH SIDES)

FOOTPATH RECONSTRUCTION – CONSULTATION PLAN

FILE NO. ---

SHEET NO. 1

PLAN NO.

CAD FILE ---